Cat® C175-20

Diesel Generator Sets

Image shown may not reflect actual configuration

Bore – mm (in)	175 (6.89)
Stroke – mm (in)	220 (8.66)
Displacement – L (in³)	105.8 (6456)
Compression Ratio	15.3:1
Aspiration	TA
Fuel System	Common Rail
Governor Type	ADEM™ A4

Prime-DCP 60 Hz ekW (kVA)	Emissions Performance
3600 (4500)	Optimized for Low Fuel Consumption

Features

Cat® Diesel Engine

- Designed and optimized for low fuel consumption
- Reliable performance proven in thousands of applications worldwide
- Certified alternative fuels including Hydrotreated Vegetable Oil (HVO), Renewable Diesel (RD) and Hydrotreated Renewable Diesel (HRD) which meet EN 15940 or ASTM D975 can be used or blended with EN 590 diesel

Generator Set Package

- Accepts 100% block load in one step
- Meets NFPA 110 loading requirements
- Conforms to ISO 8528-5 G3 load acceptance requirements
- Reliability verified through torsional vibration, fuel consumption, oil consumption, transient performance, and endurance testing

Alternators

- Superior motor starting capability minimizes need for oversizing generator
- Designed to match performance and output characteristics of Cat diesel engines

Cat Energy Control System (ECS)

- User-friendly interface and navigation
- Scalable system to meet a wide range of installation requirements
- Expansion modules and site specific programming for specific customer requirements
- Graphical touchscreen display
- Easily upgradeable

Warranty

- 12 months/unlimited hour warranty for prime-DCP ratings
- Extended service protection is available to provide extended coverage options

Worldwide Product Support

- Cat dealers have over 1,800 dealer branch stores operating in 200 countries
- Your local Cat dealer provides extensive post-sale support, including maintenance and repair agreements

Financing

- Caterpillar offers an array of financial products to help you succeed through financial service excellence
- Options include loans, finance lease, operating lease, working capital, and revolving line of credit
- Contact your local Cat dealer for availability in your region

Standard and Optional Equipment

Engine

Air Cleaner

- ❑ Single element

Muffler

- ❑ Industrial grade (15 dB)
- ❑ Residential grade (25 dB)
- ❑ Critical grade (35 dB)

Starting

- ❑ Standard batteries
- ❑ Oversized batteries
- ❑ Standard electric starter(s)
- ❑ Heavy duty electric starter(s)
- ❑ Dual electric starter(s)
- ❑ Air starter(s)
- ❑ Jacket water heater

Alternator

Output voltage

- ❑ 4160V
- ❑ 6300V
- ❑ 6600V
- ❑ 6900V
- ❑ 12470V
- ❑ 13200V
- ❑ 13800V

Temperature Rise (over 40°C ambient)

- ❑ 150°C
- ❑ 125°C/130°C
- ❑ 105°C
- ❑ 80°C

Winding type

- ❑ Form wound

Excitation

- ❑ Permanent magnet (PM)

Attachments

- ❑ Anti-condensation heater
- ❑ Stator and bearing temperature monitoring and protection

Control System

Controller

- ❑ Cat ECS 100
- ❑ Cat ECS 200
- ❑ EMCP 4.4

Attachments

- ❑ Local annunciator module
- ❑ Remote annunciator module
- ❑ Expansion I/O module
- ❑ Remote monitoring software

Charging

- ❑ Battery charger – 20A
- ❑ Battery charger – 35A
- ❑ Battery charger – 50A

Vibration Isolators

- ❑ Rubber
- ❑ Spring
- ❑ Seismic rated

Telematics

Connectivity

- ❑ Ethernet
- ❑ Cellular

Extended Service Options

Terms

- ❑ 2 year (prime)
- ❑ 3 year
- ❑ 5 year
- ❑ 10 year

Coverage

- ❑ Silver
- ❑ Gold
- ❑ Platinum
- ❑ Platinum Plus

Ancillary Equipment

- ❑ Automatic transfer switch (ATS)
- ❑ Paralleling switchgear
- ❑ Paralleling controls

Certifications

- ❑ UL 2200 Listed
- ❑ IBC seismic certification
- ❑ OSHPD pre-approval

Note: *Some options may not be available on all models. Certifications may not be available with all model configurations. Consult factory for availability.*

Package Performance

Performance	Prime-DCP	
Frequency	60 Hz	
Genset power rating without fan	3600 ekW	
Genset power rating without fan @ 0.8 power factor	4500 kVA	
Emissions	Low Fuel	
Performance number	EM5920-00	
Fuel Consumption		
100% load without fan – L/hr (gal/hr)	893.0	(235.9)
75% load without fan – L/hr (gal/hr)	646.5	(170.8)
50% load without fan – L/hr (gal/hr)	456.7	(120.7)
25% load without fan – L/hr (gal/hr)	257.6	(68.1)
Cooling System		
Engine coolant capacity – L (gal)	440.0	(116.2)
Inlet Air		
Combustion air inlet flow rate – m^3/min (cfm)	309.5	(10927.6)
Exhaust System		
Exhaust stack gas temperature – °C (°F)	458.0	(856.4)
Exhaust gas flow rate – m^3/min (cfm)	775.3	(27376.3)
Exhaust system backpressure (maximum allowable) – kPa (in. water)	6.7	(27.0)
Heat Rejection		
Heat rejection to jacket water – kW (Btu/min)	1857	(105629)
Heat rejection to exhaust (total) – kW (Btu/min)	3459	(196692)
Heat rejection to aftercooler – kW (Btu/min)	348	(19781)
Heat rejection to atmosphere from engine – kW (Btu/min)	194	(11017)
Heat rejection from alternator – kW (Btu/min)	158	(8974)
Emissions* (Nominal)		
NO_x mg/Nm^3 (g/hp-h)	2816.7	(5.57)
CO mg/Nm^3 (g/hp-h)	303.2	(0.63)
HC mg/Nm^3 (g/hp-h)	69.9	(0.17)
PM mg/Nm^3 (g/hp-h)	18.2	(0.04)
Emissions* (Potential Site Variation)		
NO_x mg/Nm^3 (g/hp-h)	3380.0	(6.69)
CO mg/Nm^3 (g/hp-h)	545.8	(1.13)
HC mg/Nm^3 (g/hp-h)	92.9	(0.22)
PM mg/Nm^3 (g/hp-h)	25.5	(0.06)

**mg/Nm^3 levels are corrected to 5% O_2. Data must not be used for emissions permitting purposes, contact your Cat dealer for the latest applicable emissions data and for details on measurement standards and procedures.*

Weights and Dimensions

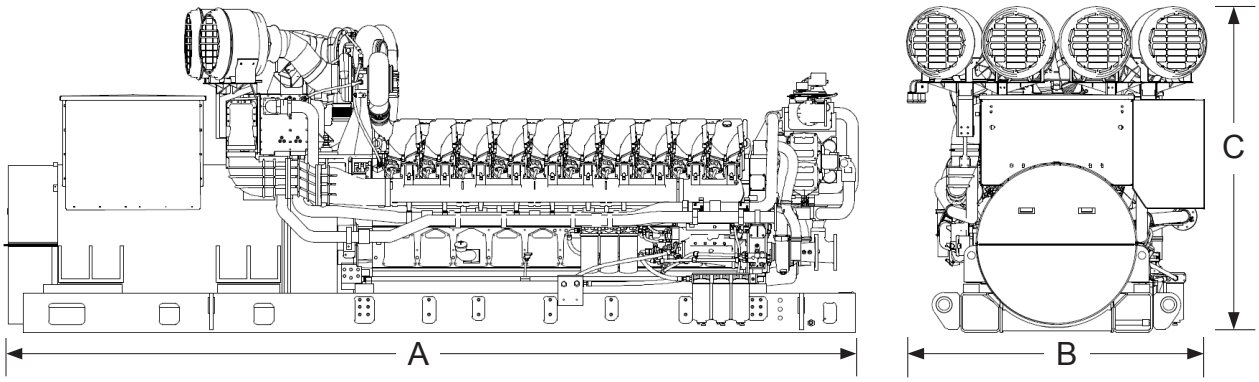

Dim "A" mm (in)	Dim "B" mm (in)	Dim "C" mm (in)	Dry Weight kg (lb)
6667 (262.5)	2365 (93.1)	2536 (99.8)	25 000 (55,100)

Note: *For reference only. Do not use for installation design. Contact your local Cat dealer for precise weights and dimensions.*

Ratings Definitions

Prime-DCP
For data center applications only. Prime-DCP power output available with varying load for unlimited time. Average power output is not to exceed 100% of prime-DCP rated ekW. Typical peak demand is 100% of the prime-DCP rated ekW with 10% overload capability for emergency use for a maximum of 1 hour in 12. Overload operation cannot exceed 25 hours per year.

Applicable Codes and Standards
AS 1359, UL 2200 3rd edition, UL 489, UL 869A, IBC, IEC 60034-1, ISO 3046, ISO 8528, NEMA MG1-22, NEMA MG1-33, 2014/35/EU, 2006/42/EC, 2014/30/EU and facilitates compliance to NFPA 37, NFPA 70, NFPA 99, NFPA 110.

Note: Codes may not be available in all model configurations. Please consult your local Cat dealer for availability.

Data Center Applications
- ISO 8528-1 Data Center Power (DCP) compliant per Cat diesel generator set prime-DCP rating.
- All ratings Tier III/Tier IV compliant per Uptime Institute requirements.
- All ratings ANSI/TIA-942 compliant for Rated-1 through Rated-4 data centers.

Fuel Rates
Fuel consumption reported in accordance with ISO 3046-1, based on fuel oil of 35º API [16°C (60ºF)] gravity having an LHV of 42,780 kJ/kg (18,390 Btu/lb) when used at 15ºC (59ºF) and weighing 850 g/liter (7.0936 lbs/U.S. gal.) All fuel consumption values refer to rated engine power.

www.cat.com/electricpower

©2026Caterpillar
All rights reserved.

Materials and specifications are subject to change without notice.
The International System of Units (SI) is used in this publication.

CAT, CATERPILLAR, LET'S DO THE WORK, their respective logos, "Caterpillar Corporate Yellow", the "Power Edge" and Cat "Modern Hex" trade dress as well as corporate and product identity used herein, are trademarks of Caterpillar and may not be used without permission.