Cat® 3516C

Diesel Generator Sets

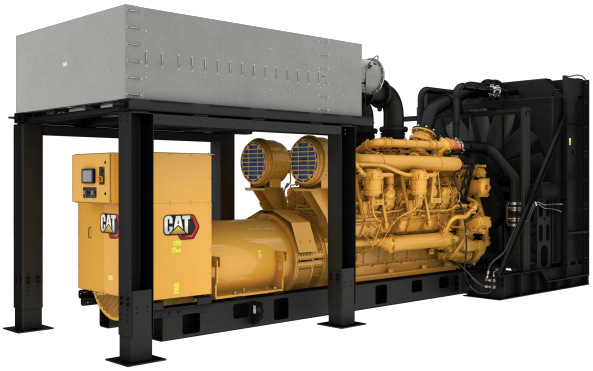

Image shown may not reflect actual configuration

Bore – mm (in)	170 (6.69)
Stroke – mm (in)	215 (8.46)
Displacement – L (in³)	78.1 (4765)
Compression Ratio	14.0:1
Aspiration	TA
Fuel System	EUI
Governor Type	ADEM™ A4

Standby 60 Hz ekW (kVA)	Mission Critical 60 Hz ekW (kVA)	Prime 60 Hz ekW (kVA)	Emissions Performance
2500 (3125)	2500 (3125)	2250 (2812)	U.S. EPA Tier 4 Final

Features

Cat® Diesel Engine

- Meets U.S. EPA Tier 4 Final emission standards
- Reliable performance proven in thousands of applications worldwide
- Certified alternative fuels including Hydrotreated Vegetable Oil (HVO), Renewable Diesel (RD) and Hydrotreated Renewable Diesel (HRD) which meet EN 15940 or ASTM D975 can be used or blended with EN 590 diesel

Generator Set Package

- Accepts 100% block load in one step and meets NFPA 110 loading requirements
- Conforms to ISO 8528-5 G3 load acceptance requirements
- Reliability verified through torsional vibration, fuel consumption, oil consumption, transient performance, and endurance testing

Alternators

- Superior motor starting capability minimizes need for oversizing generator
- Designed to match performance and output characteristics of Cat diesel engines

Cooling System

- Cooling systems available to operate in ambient temperatures up to 50°C (122°F)
- Tested to ensure proper generator set cooling

Clean Emissions Module

- Diesel oxidation catalyst for particulate matter (PM) and hydrocarbon (HC) control
- Selective catalytic reduction (SCR) for nitrogen oxides (NO_x) control
- Integrated electronics for monitoring, protection, and closed loop NO_x control

Cat Energy Control System (ECS)

- User-friendly interface and navigation
- Scalable system to meet a wide range of installation requirements
- Expansion modules and site specific programming for specific customer requirements
- Graphical touchscreen display
- Easily upgradeable

Warranty

- 24 months/1000-hour warranty for standby and mission critical ratings
- 12 months/unlimited hour warranty for prime and continuous ratings
- Extended service protection is available to provide extended coverage options

Worldwide Product Support

- Cat dealers have over 1,800 dealer branch stores operating in 200 countries
- Your local Cat dealer provides extensive post-sale support, including maintenance and repair agreements

Financing

- Caterpillar offers an array of financial products to help you succeed through financial service excellence
- Options include loans, finance lease, operating lease, working capital, and revolving line of credit
- Contact your local Cat dealer for availability in your region

Standard and Optional Equipment

Engine

Air Cleaner
- ❑ Single element
- ❑ Dual element

Muffler
- ❑ Industrial grade (12 dB)

Starting
- ❑ Standard batteries
- ❑ Oversized batteries
- ❑ Standard electric starter(s)
- ❑ Heavy duty electric starter(s)
- ❑ Air starter(s)
- ❑ Jacket water heater

Alternator

Output voltage
- ❑ 480V ❑ 6600V
- ❑ 600V ❑ 6900V
- ❑ 2400V ❑ 12470V
- ❑ 4160V ❑ 13200V
- ❑ 6300V ❑ 13800V

Temperature Rise (over 40°C ambient)
- ❑ 150°C
- ❑ 125°C/130°C
- ❑ 105°C
- ❑ 80°C

Winding type
- ❑ Random wound
- ❑ Form wound

Excitation
- ❑ Self excited
- ❑ Internal excitation (IE)
- ❑ Permanent magnet (PM)

Attachments
- ❑ Anti-condensation heater
- ❑ Stator and bearing temperature monitoring and protection

Power Termination

Type
- ❑ Bus bar
- ❑ Circuit breaker
- ❑ 1600A ❑ 2000A
- ❑ 2500A ❑ 3000A
- ❑ 3200A ❑ 4000A
- ❑ 5000A
- ❑ UL ❑ IEC
- ❑ 3-pole ❑ 4-pole
- ❑ Manually operated
- ❑ Electrically operated

Trip Unit
- ❑ LSI ❑ LSI-G
- ❑ LSIG-P

Control System

Controller
- ❑ Cat ECS 100
- ❑ EMCP 4.4

Attachments
- ❑ Local annunciator module
- ❑ Remote annunciator module
- ❑ Expansion I/O module
- ❑ Remote monitoring software

Charging

- ❑ Battery charger – 10A
- ❑ Battery charger – 20A
- ❑ Battery charger – 35A

Vibration Isolators

- ❑ Rubber
- ❑ Spring
- ❑ Seismic rated

Telematics

Connectivity
- ❑ Ethernet
- ❑ Cellular

Extended Service Options

Terms
- ❑ 2 year (prime)
- ❑ 3 year
- ❑ 5 year
- ❑ 10 year

Coverage
- ❑ Silver
- ❑ Gold
- ❑ Platinum
- ❑ Platinum Plus

Ancillary Equipment

- ❑ Automatic transfer switch (ATS)
- ❑ Paralleling switchgear
- ❑ Paralleling controls

Certifications

- ❑ IBC seismic certification
- ❑ OSHPD pre-approval

Note: *Some options may not be available on all models. Certifications may not be available with all model configurations. Consult factory for availability.*

Package Performance

Performance	Standby		Mission Critical		Prime	
Frequency	60 Hz		60 Hz		60 Hz	
Genset power rating with fan	2500 ekW		2500 ekW		2250 ekW	
Genset power rating with fan @ 0.8 power factor	3125 kVA		3125 kVA		2812 kVA	
Emissions	Tier 4 Final		Tier 4 Final		Tier 4 Final	
Performance number	DM9370-03		DM9301-03		DM9371-03	
Fuel Consumption						
100% load with fan – L/hr (gal/hr)	633.7	(167.4)	633.7	(167.4)	570.2	(150.6)
75% load with fan – L/hr (gal/hr)	480.2	(126.9)	480.2	(126.9)	436.6	(115.3)
50% load with fan – L/hr (gal/hr)	345.2	(91.2)	345.2	(91.2)	317.6	(83.9)
25% load with fan – L/hr (gal/hr)	204.3	(54.0)	204.3	(54.0)	190.5	(50.3)
Diesel Exhaust Fluid (DEF) Consumption						
100% load with fan – L/hr (gal/hr)	50.8	(13.4)	50.8	(13.4)	43.8	(11.6)
75% load with fan – L/hr (gal/hr)	35.0	(9.2)	35.0	(9.2)	30.1	(7.9)
50% load with fan – L/hr (gal/hr)	18.1	(4.8)	18.1	(4.8)	15.7	(4.1)
25% load with fan – L/hr (gal/hr)	7.7	(2.0)	7.7	(2.0)	6.7	(1.8)
Cooling System						
Radiator air flow restriction (system) – kPa (in. water)	0.12	(0.48)	0.12	(0.48)	0.12	(0.48)
Radiator air flow – m^3/min (cfm)	3048.0	(107639)	3048.0	(107639)	3048.0	(107639)
Engine coolant capacity – L (gal)	233.0	(61.6)	233.0	(61.6)	233.0	(61.6)
Radiator coolant capacity – L (gal)	268.8	(71.0)	268.8	(71.0)	268.8	(71.0)
Total coolant capacity – L (gal)	501.8	(132.6)	501.8	(132.6)	501.8	(132.6)
Inlet Air						
Combustion air inlet flow rate – m^3/min (cfm)	197.8	(6983.8)	197.8	(6983.8)	196.7	(6577.3)
Exhaust System						
Exhaust stack gas temperature – °C (°F)	522.9	(973.3)	522.7	(973.3)	505.0	(941.1)
Exhaust gas flow rate – m^3/min (cfm)	556.8	(19661.9)	556.8	(19661.9)	508.8	(17966.0)
Exhaust system backpressure (maximum allowable) – kPa (in. water)	6.0	(24.0)	6.0	(24.0)	6.0	(24.0)
CEM outlet temperature – °C (°F)	501.7	(935.0)	501.7	(935.0)	488.1	(910.6)
Heat Rejection						
Heat rejection to jacket water – kW (Btu/min)	841	(47832)	8412	(47832)	765	(43514)
Heat rejection to exhaust (total) – kW (Btu/min)	2571	(146192)	2571	(146192)	2308	(131244)
Heat rejection to aftercooler – kW (Btu/min)	665	(37839)	665	(37839)	579	(32928)
Heat rejection to atmosphere from engine – kW (Btu/min)	167	(9525)	167	(9525)	157	(8945)
Heat rejection to atmosphere from CEM – kW (Btu/min)	90.0	(5098)	90.0	(5098)	90.0	(5098)
Heat rejection from alternator – kW (Btu/min)	121	(6853)	121	(6853)	106	(6028)

Weights and Dimensions

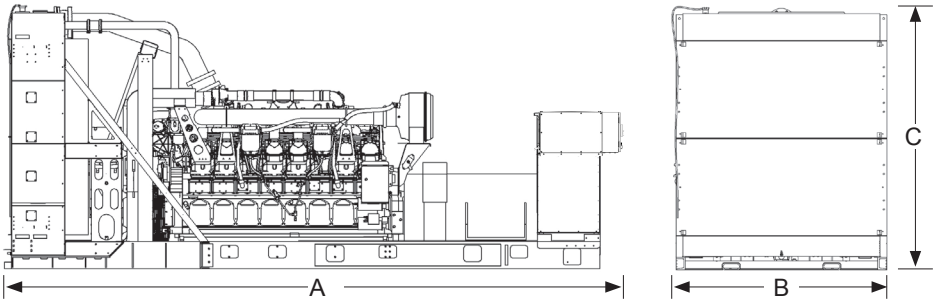

Dim "A" mm (in)	Dim "B" mm (in)	Dim "C" mm (in)	Dry Weight kg (lb)
7252 (285.5)	2569 (101.2)	3016 (118.7)	18 270 (40,280)

Note: *For reference only. Do not use for installation design. Contact your local Cat dealer for precise weights and dimensions.*

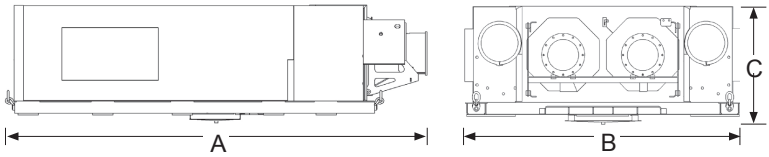

Dim "A" mm (in)	Dim "B" mm (in)	Dim "C" mm (in)	Dry Weight kg (lb)
3460 (136.2)	2257 (88.9)	895 (35.2)	2064 (4550)

Ratings Definitions

Standby
Output available with varying load for the duration of the interruption of the normal source power. Average power output is 70% of the standby rated ekW. Typical operation is 200 hours per year, with maximum expected usage of 500 hours per year.

Mission Critical
Output available with varying load for the duration of the interruption of the normal source power. Average power output is 85% of the mission critical rated ekW. Typical peak demand up to 100% of rated ekW for up to 5% of the operating time. Typical operation is 200 hours per year, with maximum expected usage of 500 hours per year.

Prime
Output available with varying load for an unlimited time. Average power output is 70% of the prime rated ekW. Typical peak demand is 100% of prime rated ekW with 10% overload capability for emergency use for a maximum of 1 hour in 12. Overload operation cannot exceed 25 hours per year.

Applicable Codes and Standards
AS 1359, UL 489, UL 869A, IBC, IEC 60034-1, ISO 3046, ISO 8528, NEMA MG1-22, NEMA MG1-33, 2014/35/EU, 2006/42/EC, 2014/30/EU and facilitates compliance to NFPA 37, NFPA 70, NFPA 99, NFPA 110.

Note: Codes may not be available in all model configurations. Please consult your local Cat dealer for availability.

Data Center Applications
- All ratings Tier III/Tier IV compliant per Uptime Institute requirements.
- All ratings ANSI/TIA-942 compliant for Rated-1 through Rated-4 data centers.

Fuel Rates
Fuel consumption reported in accordance with ISO 3046-1, based on fuel oil of 35º API [16°C (60ºF)] gravity having an LHV of 42,780 kJ/kg (18,390 Btu/lb) when used at 15ºC (59ºF) and weighing 850 g/liter (7.0936 lbs/U.S. gal.) All fuel consumption values refer to rated engine power.

www.cat.com/electricpower

©2026 Caterpillar
All rights reserved.

Materials and specifications are subject to change without notice.
The International System of Units (SI) is used in this publication.

CAT, CATERPILLAR, LET'S DO THE WORK, their respective logos, "Caterpillar CorporateYellow", the "Power Edge" and Cat "Modern Hex" trade dress as well as corporate and product identity used herein, are trademarks of Caterpillar and may not be used without permission.