Cat® DE165 GC

Diesel Generator Sets

Standby and Prime: 50 Hz & 60 Hz

Image shown may not reflect actual configuration

Engine Model	Cat® C7.1 Inline 4-stroke Diesel
Bore x Stroke	105.0 mm x 135.0 mm (4.1 in x 5.3 in)
Displacement	7.0 L (427.8 in³)
Compression Ratio	16.0:1
Aspiration	Turbocharged Air To Air Charge Cooled
Fuel Injection System	Inline
Governor	Mechanical - G2 Class* capable

Model	Standby		Prime (SRR)	Emission Strategy
	50 Hz kVA (ekW)	60 Hz kVA (ekW)	50 Hz kVA (ekW)	
DE165 GC	165 (132)	185.5 (150)	148.5 (118.8)	Low BSFC

PACKAGE PERFORMANCE

Performance	Standby		Prime (SRR)
	50 Hz	60 Hz	50 Hz
Genset power rating	165 kVA	187.5 kVA	148.5 kVA
Genset power rating with fan @ 0.8 power factor	132 ekW	150 ekW	118.8 ekW
Emissions	Low BSFC		
Performance number	P4200A	P4202A	-
Fuel Consumption			
Fuel tank capacity, L (gal)	325 (85.9)		
100% load with fan, L/hr (gal/hr)	35.1 (9.3)	41.1 (10.9)	33.2 (8.8)
75% load with fan, L/hr (gal/hr)	27.2 (7.2)	31.9 (8.4)	24.8 (6.6)
50% load with fan, L/hr (gal/hr)	18.3 (4.8)	21.8 (5.8)	17.4 (4.6)
Cooling System[1]			
Radiator air flow, m³/min (CFM)	259 (9147)	318 (11230)	259 (9147)
Total coolant capacity, L (gal)	21.0 (5.5)		
Inlet Air			
Max. combustion air intake restriction, kPa (in. water)	5.0 (20.1)		
Combustion air inlet flow rate, m³/min (CFM)	10.7 (377)	15.0 (529)	8.1 (286)
Exhaust System			
Exhaust stack gas temperature, °C (°F)	484 (903)	407 (765)	464 (868)
Exhaust gas flow rate, m³/min (CFM)	25.5 (902)	32.2 (1137)	24.0 (844)
Exhaust system backpressure (maximum allowable), kPa (in. water)	6.0 (1.8)		
Heat Rejection			
Heat rejection to jacket water, kW (BTU/min)	75.7 (4305)	80.1 (4555)	72.0 (4094)
Heat rejection to alternator, kW (BTU/min)	10.2 (580)	11.1 (631)	10.2 (580)
Heat rejection to atmosphere from engine, kW (BTU/min)	12.2 (694)	12.3 (699)	11.0 (625)
Heat rejection to exhaust (total), kW (BTU/min)	105.6 (6005)	120.6 (6858)	96 (5494)

Alternator[2]	50 Hz (Standby/Prime)			60 Hz (Standby)				
Voltages	380	415	400	480	440	220	380	240
Motor starting capability @ 30% Voltage Dip, skVA	378	453	419	504	425	425	316	377
Current, Amps	247 / 222	228 / 205	236 / 212	225.5	245	490	255	437
Temperature Rise, °C	163/27	163/27	163/27	130/40	163/27	163/27	163/27	163/27
Frame Size	A2625L41							
Excitation	S.E							

WEIGHTS & DIMENSIONS

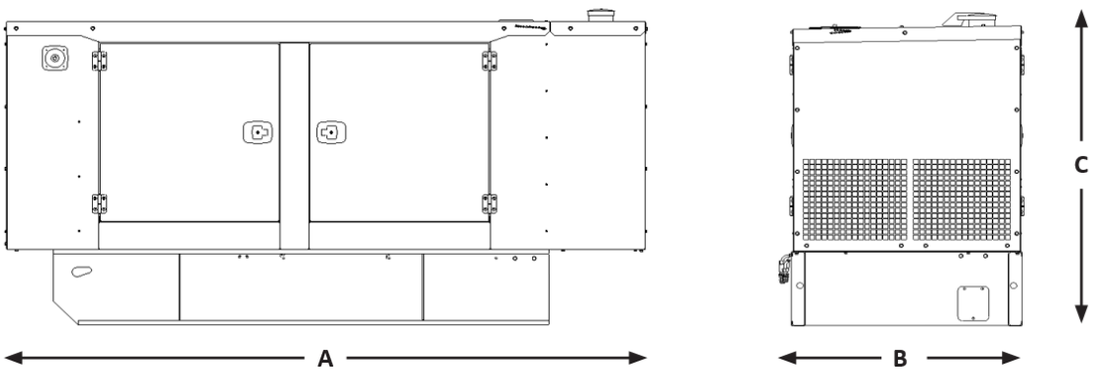

Note: General configuration not to be used for installation. See general dimension drawings for detail.

Length "A" mm (in)	Width "B" mm (in)	Height "C" mm (in)	Dry Weight# kg (lb)
3325 (130.9)	1134 (44.6)	1666 (65.6)	1834 (4043.3)

#Weight includes standard generator, Enclosure and Integral Tank base

APPLICABLE CODES AND STANDARDS:

AS1359, IEC60034-1, ISO3046, ISO8528, NEMA MG1-33, EAC,CE,UKCA.

Note: Codes may not be available in all model configurations.
Please consult your local Cat Dealer representative for availability.

STANDBY: Output available with varying load for the duration of the interruption of the normal source power. Average power output is 70% of the standby power rating. Typical operation is 200 hours per year, with maximum expected usage of 500 hours per year.

PRIME (SRR): Output available with varying load. Average power output is 70% of the prime power rating. Typical peak demand is 100% of prime rated ekW with 10% overload capability for emergency use for a maximum of 1 hour in 12. Overload operation cannot exceed 25 hours per year. Maximum run time not to exceed 2000 hours per year.

DEFINITIONS AND CONDITIONS

[1] For ambient and altitude capabilities consult your Cat dealer. Air flow restriction (system) is added to existing restriction from factory.

[2] Generator temperature rise is based on IEC 60034-1.

RATINGS: Ratings are based on SAE J1349 standard conditions. These ratings also apply at ISO 3046 standard conditions.

* Governing Class capability as per ISO8528-5 for 60 Hz application only. Consult your local Cat dealer for configuration and site specific transient performance classification.

www.cat.com/electricpower

©2025 Caterpillar. All rights reserved.
Materials and specifications are subject to change without notice.
The International System of Units (SI) is used in this publication.
CAT, CATERPILLAR, LET'S DO THE WORK, their respective logos, "Caterpillar Corporate Yellow" the "Power Edge" and Cat "Modern Hex" trade dress as well as corporate and product identity used herein, are trademarks of Caterpillar and may not be used without permission.